Ref. R3257

M-TRACK

T 40

» **Double track** for **stage** and **interior design applications**

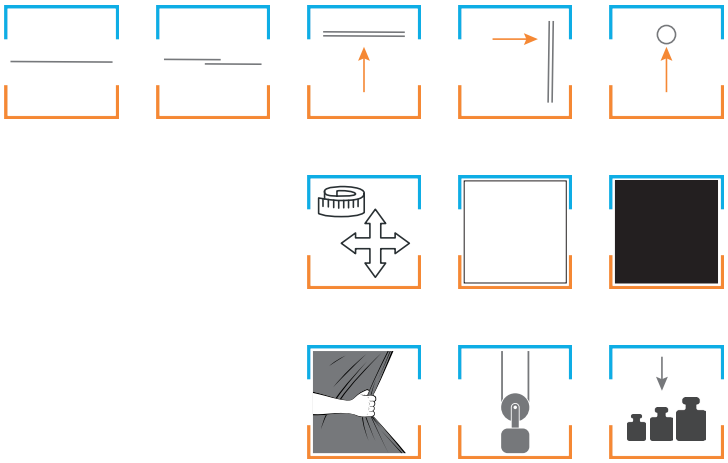

www.teviloj.fr **www.azur-scenic.com**

CHARACTERISTICS

Name	**M-Track**	**Ref**	R3257
Operations	» Walk-along » Manual cord pull		
Assemblies	» Dual track for one or more curtains » Option of central, lateral, multiple, asymmetrical openings, staggered curtains, etc.		
Types of mounting	» Ceiling (direct installation with a drilled profile) » Wall (via brackets) » Under pole Ø 50 mm (via collars or hooks)		
Colours	» White profile and pulleys (with white runners) » Black profile and pulleys (with white runners)		
Specifications	» Double track allowing for a number of opening configurations » Very easy installation » Lightweight and robust (aluminium profile) » Particularly fluid and silent operation (rollers mounted on ball bearings) » Neat and elegant design		
Uses	» Hanging curtains and medium weight loads » All functional and decorative applications (stage spaces, cinemas, reception rooms, museums, offices, hotels, restaurants, etc.)		

DIMENSIONS

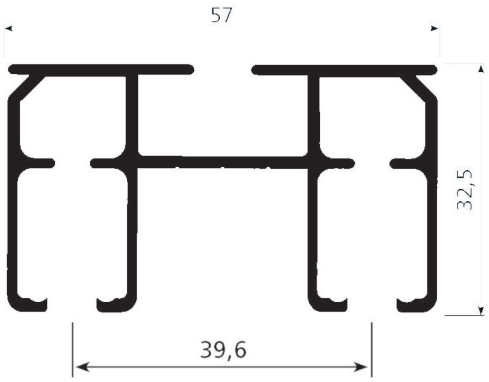

Track cross-section 1

APPEARANCE

» *Ball bearing runner*

EXAMPLES OF OPENINGS

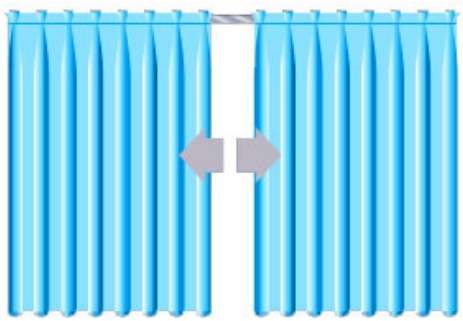

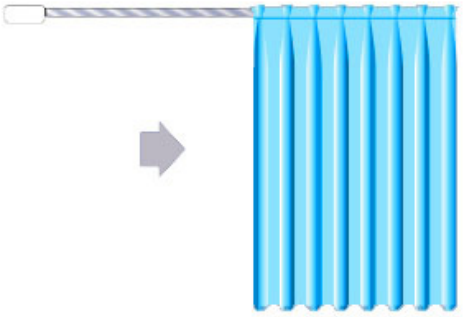

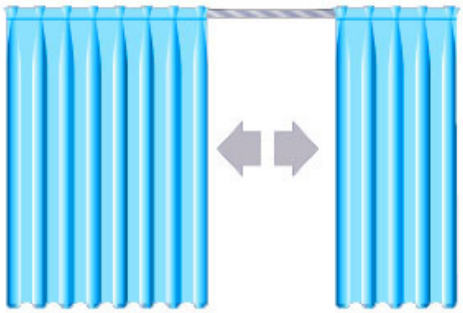

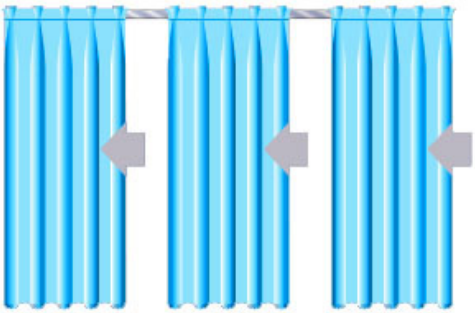

CONTACT OUR EXPORT TEAM

+33 (0)6 23 21 50 28

export@azur-scenic.com

The information in this document provides generic values that describe only the standard technical specifications and chemical composition of the products concerned. No guarantee is offered. Any images are non-contractual. The names of the colours are given for information purposes only and do not guarantee a specific colour.